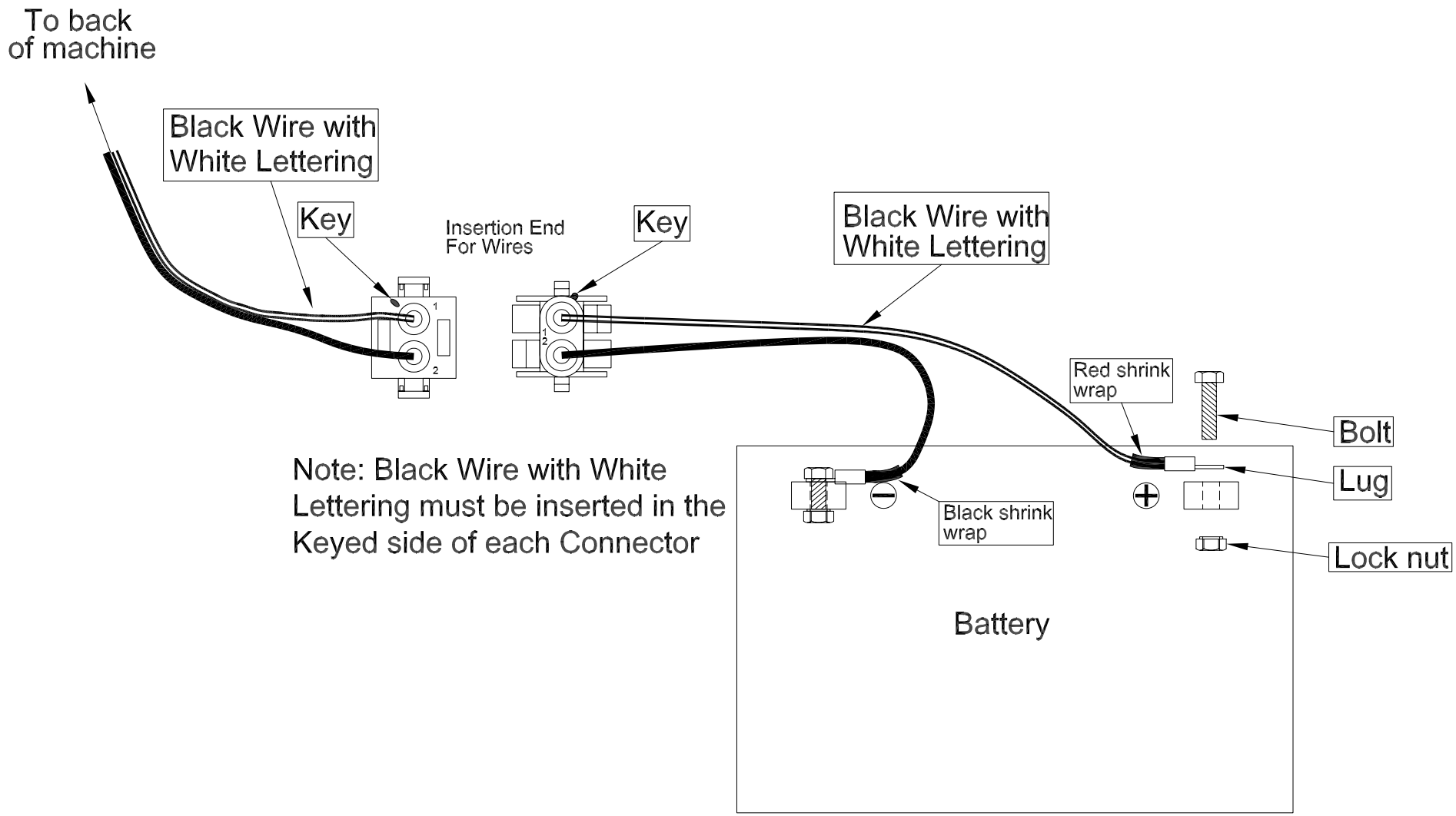

REV	DATE	BY	DESCRIPTION	RTI TECHNOLOGIES, INC. York, Pennsylvania	MATERIAL NA
					FINISH N/A
					DRAWN BY E.I. Shultz 03-12-03
				DWG BATTERY CORD CONNECTIONS MCX-2S 2002	560-80234-00